Oxford Cambridge and RSA

Tuesday 18 June 2024 – Morning

GCSE (9–1) Design and Technology

J310/01 Principles of Design and Technology

Time allowed: 2 hours

You must have:
- the Insert (inside this document)

You can use:
- a scientific calculator
- a ruler (cm/mm)
- geometrical instruments

Please write clearly in black ink. **Do not write in the barcodes.**

Centre number | | | | | | Candidate number | | | | |

First name(s) _____

Last name _____

INSTRUCTIONS
- Use black ink. You can use an HB pencil, but only for graphs and diagrams.
- Write your answer to each question in the space provided. If you need extra space use the lined pages at the end of this booklet. The question numbers must be clearly shown.
- Answer **all** the questions.
- Use the Insert to answer the questions in Section B.
- Where appropriate, your answer should be supported with working. Marks might be given for using a correct method, even if your answer is wrong.

INFORMATION
- The total mark for this paper is **100**.
- The marks for each question are shown in brackets **[ ]**.
- Quality of extended response will be assessed in questions marked with an asterisk (*).
- This document has **24** pages.

ADVICE
- Read each question carefully before you start your answer.

© OCR 2024 [603/0663/4]
DC (ST/SW) 335977/6
OCR is an exempt Charity

SECTION A

1 These images show playground equipment.

(a) The sailing ship is made from softwood.

(i) Name **one** softwood.

..... **[1]**

(ii) Give **two** properties of softwood that make it a suitable material for playground equipment.

1 .....

2 .....
[2]

(b) The chains that help attach the mast to the sailing ship are made from stainless steel which is a ferrous metal.

Give **two** reasons for using stainless steel for the chains.

1 .....

.....

2 .....

.....
[2]

© OCR 2024

(c) A sail is being added to the mast to enhance the design.

The sail is a triangular piece of fabric with dimensions shown below.

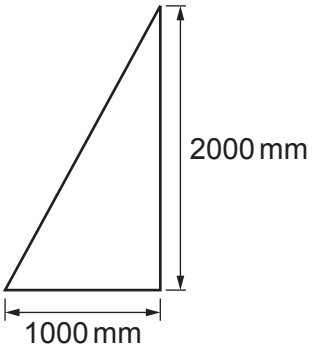

Calculate the surface area of fabric needed for the sail.

Give your answer in **m²**.

Surface area .....m^2 **[2]**

(d) The primary users of the playground equipment are children.

Identify **two** other stakeholders that would need to be considered when designing playground equipment for a local park.

1 .....

2 .....
[2]

(e) Data is gathered from primary and secondary sources before designing.

(i) Identify **two** methods of gathering primary data.

1 .....

2 .....
[2]

(ii) Identify **one** piece of secondary research that could be used when designing playground equipment.

..... **[1]**

© OCR 2024

(f)* Timber is often considered a sustainable choice of material.

Discuss the importance of considering sustainability when sourcing raw materials for products.

To support your answer, refer to products and materials that you are familiar with.

.....

.....

.....

.....

.....

.....

.....

.....

.....

.....

.....

.....

.....

.....

.....

.....

.....

.....

.....

.....

.....

.....

.....

..... **[8]**

© OCR 2024

BLANK PAGE

PLEASE DO NOT WRITE ON THIS PAGE

Turn over for the next question

© OCR 2024

2 Card is often used for fast-food packaging.

(a) This is an image of a fast-food fries box made from thin card.

Dimensions are given in millimetres (mm).

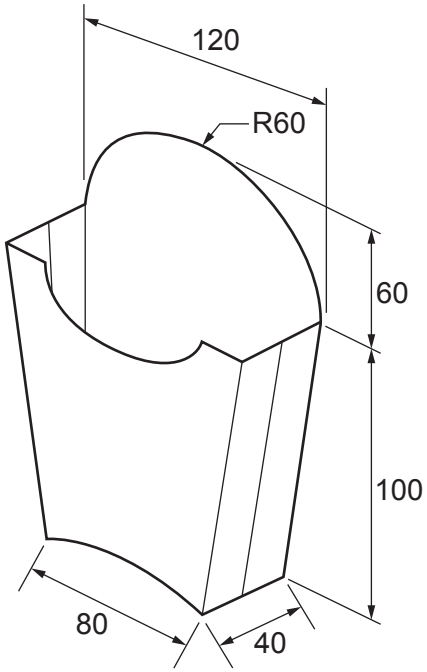

© OCR 2024

Complete the drawing to show the front, plan and side view of the fries box.

The grid points are 10 mm apart. Use the scale 1:2.

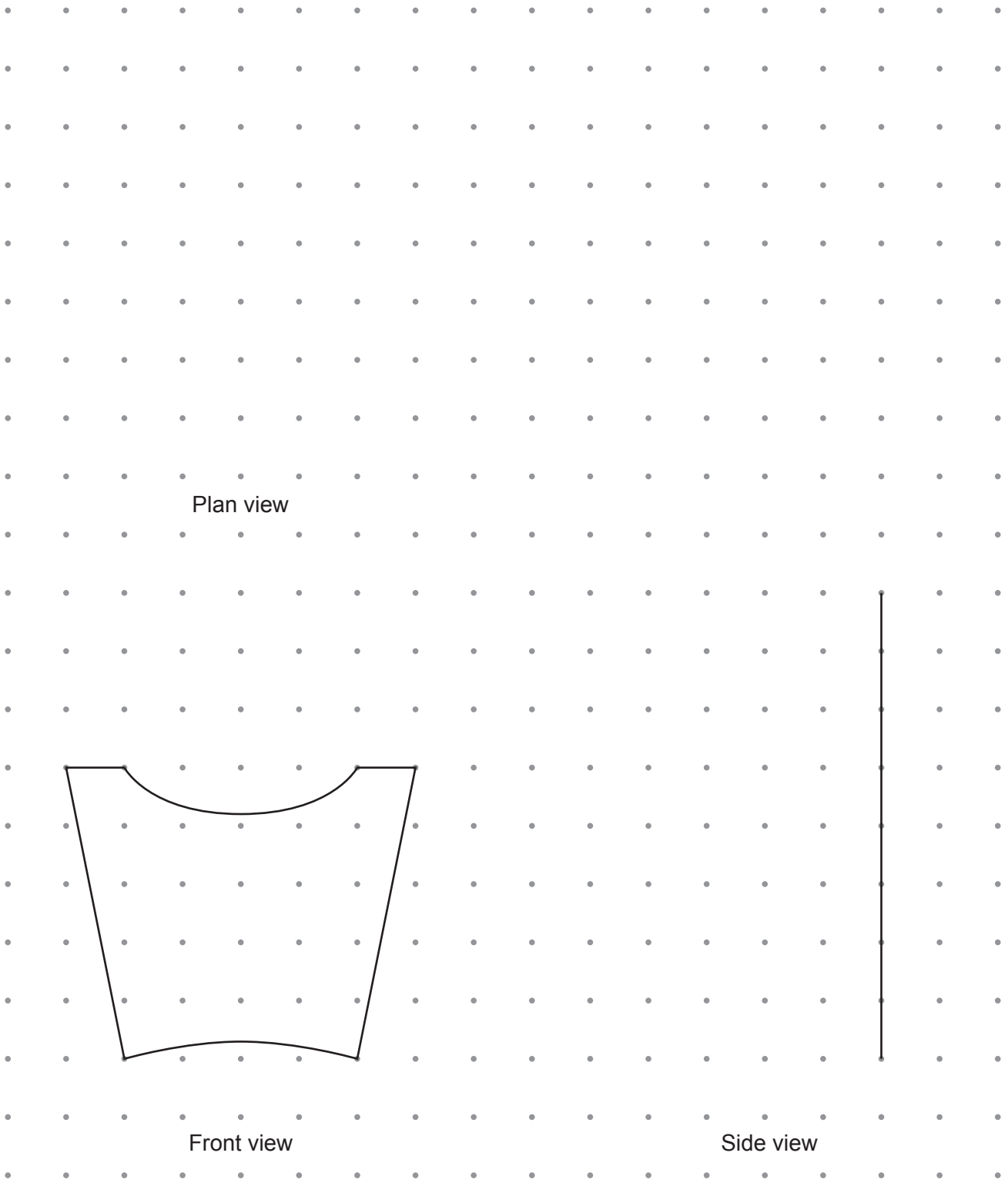

[5]

© OCR 2024

(b) This drawing shows the net (development) of a fast-food burger box.

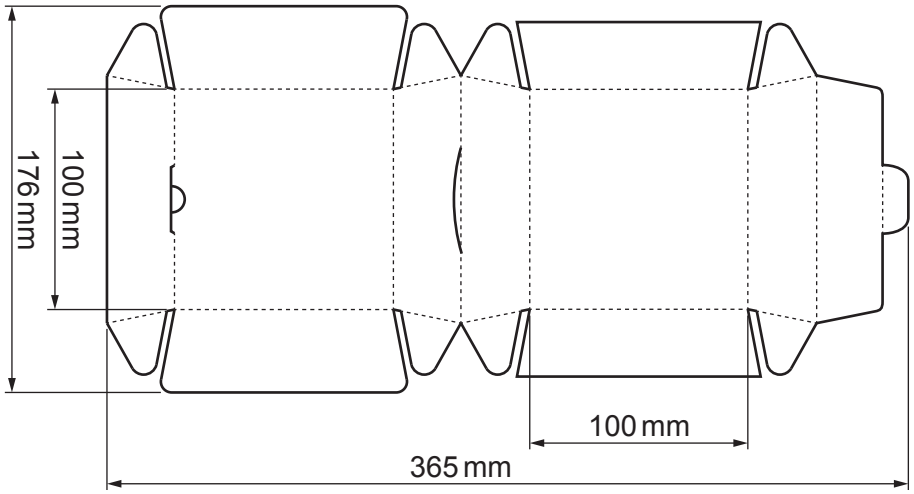

The burger box is manufactured from card. The card is supplied in sheets that are 841 mm × 594 mm.

(i) Calculate the maximum number of net (developments) that can be cut from **one** sheet of 841 × 594 mm card.

Maximum number ..... **[2]**

(ii) The manufacturer needs to make 12 500 burger boxes.

Calculate how many sheets of card are required.

Number of sheets ..... **[2]**

© OCR 2024

(c) The burger box is made from card because it can be recycled and printed on.

State **two** other reasons why card is a good choice of material for manufacturers of food packaging.

1 .....

.....

2 .....

.....

[2]

(d) The manufacturer wants to compare the cost of printing the burger boxes in black and white with the cost of printing the burger boxes in full colour.

Use the information below.

Black and white printing = £0.02p per burger box

Full colour printing = £0.07p per burger box

(i) Calculate the cost saving of printing 12 500 burger boxes in black and white compared to full colour.

Cost saving £ ..... **[2]**

(ii) Adding one extra colour to the black and white printing increases the overall cost by 30%.

Calculate the cost of printing 12 500 burger boxes in black and white with one extra colour.

Cost £ ..... **[2]**

© OCR 2024

3 These images show an adidas® trainer with a 3D printed sole.

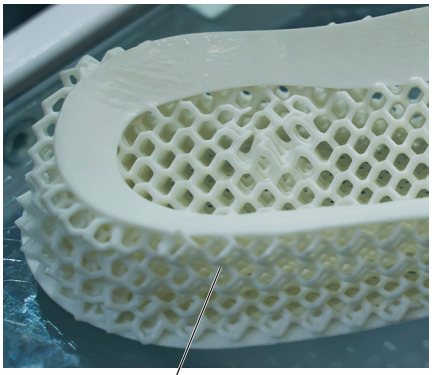

3D printed sole

(a) PLA is a thermo polymer commonly used in 3D printing.

(i) Name **two** other thermo polymers.

1 .....

2 .....

[2]

(ii) Give **two** reasons why thermo polymers are a good choice for 3D printing.

1 .....

.....

2 .....

.....

[2]

(iii) Explain **one** benefit to a designer of using 3D printing in the design of trainers.

.....

.....

.....

.....

..... **[3]**

© OCR 2024

(b) Trainer designers and manufacturers are exploring the use of pressure sensors in footwear to monitor movement and stability.

Give **one** example of a sensor that is used in another product.

Explain how it works and improves the functionality of that product.

Name of sensor .....

Explanation .....

.....

.....

.....
[3]

(c) Electronic systems often use microcontrollers.

Explain **one** way that the use of programmable microcontrollers in electronic products can benefit consumers.

.....

.....

.....

..... **[2]**

© OCR 2024

(d) 3D printing is an example of an emerging technology.

(i) Identify **two** other examples of emerging technologies.

1 .....

2 .....

[2]

(ii) Evaluate the impact that emerging technologies are having on the manufacturing industry.

.....

.....

.....

.....

.....

.....

.....

.....

.....

.....

.....

.....

.....

.....

.....

.....

.....

.....

.....

.....

.....

..... **[6]**

© OCR 2024

SECTION B

Use the **Insert** to answer **all** the questions in Section B.
The **Insert** has images and information about products that are examples of design classics (iconic products).

4 Refer to **page 8** of the Insert.

(a) **Image A** shows the original Apple® iPod and **Image B** shows the updated Apple® iPod touch.

(i) Complete the table with the missing inputs or outputs.

Function	Component	Input or output
Allows the user to select songs/apps and play music	Switch (Click wheel)	
Produces sound to play music for the user	EarPods (in-ear headphones)	

[2]

(ii) State the component that stores electrical energy to power the devices and can be recharged.

..... **[1]**

(iii) State **two** reasons why manufacturers such as Apple® upgrade and update products.

1 .....

.....

2 .....

.....

[2]

(iv) The Apple® iPod is said to be an example of systems thinking.

Explain the design approach of **systems thinking**.

.....

.....

.....

..... **[2]**

© OCR 2024

(b) In 2012, Nike® introduced the flyknit trainer shown in **Image C**.

The one-piece upper of the flyknit trainer is made of woven fabric.

(i) Describe what is meant by a **woven** fabric.

.....

..... **[1]**

(ii) Explain **one** benefit of using a woven fabric for sports wear.

.....

.....

..... **[2]**

© OCR 2024

You need to answer questions **5** and **6** about **one** of the products listed below covering an area you have studied in depth.

Information about the products is in the **Insert**.

Before you choose a product, read all parts of questions **5** and **6**.

You **must** tick **one** box below to indicate your chosen product.

☐ **Product 1:** Toblerone packaging – (papers and boards)

☐ **Product 2:** Levi denim jeans – (fibres and fabrics)

☐ **Product 3:** Anglepoise lamp – (design engineering)

☐ **Product 4:** Coca-Cola bottle – (polymers)

☐ **Product 5:** Juicy Salif citrus squeezer – (metals)

☐ **Product 6:** Thonet bistro chair – (timbers)

© OCR 2024

5 Study and use the images and information about your chosen product given in the **Insert**.

(a) Describe how the working properties of the material(s) used in your chosen product make it suitable for use in the product. Describe **two** different properties.

1 .....

.....

.....

2 .....

.....

.....

[4]

(b) Describe how **one** of the raw material(s) in your chosen product is sourced and processed into a usable form. **[8]**

Raw material(s): .....

.....

.....

.....

.....

.....

.....

.....

.....

.....

.....

.....

.....

.....

.....

.....

.....

.....

© OCR 2024

.....

.....

.....

.....

.....

.....

Question 5 (c) starts on Page 18

© OCR 2024

(c) Your chosen product is commercially manufactured.

(i) Identify **one** process used to manufacture your chosen product and explain why this process is suitable for commercial production.

Process .....

Explanation .....

.....

[2]

(ii) Produce a step-by-step plan to show the stages that have been used to commercially manufacture your chosen product.

You must include details of:

- Materials, tools, moulds and components that would be used
- Processes, techniques or skills
- Any digital technology used as appropriate.

You can use sketches and notes to support your answer. **[9]**

© OCR 2024

© OCR 2024

6

(a) Your chosen product has been described as a design classic (iconic product).

Explain **two** reasons why your chosen product is a design classic (iconic product).

1 .....

.....

.....

.....

2 .....

.....

.....

.....

[4]

(b)* The aesthetics of a product are important.

Explain how the aesthetics of your chosen product and other iconic products you are familiar with have influenced design thinking and product design. **[8]**

.....

.....

.....

.....

.....

.....

.....

.....

.....

.....

.....

.....

.....

.....

© OCR 2024

.....

.....

.....

.....

.....

.....

.....

.....

.....

.....

END OF QUESTION PAPER

© OCR 2024

EXTRA ANSWER SPACE

If you need extra space use these lined pages. You must write the question numbers clearly in the margin.

© OCR 2024

© OCR 2024

OCR
Oxford Cambridge and RSA

Copyright Information

OCR is committed to seeking permission to reproduce all third-party content that it uses in its assessment materials. OCR has attempted to identify and contact all copyright holders whose work is used in this paper. To avoid the issue of disclosure of answer-related information to candidates, all copyright acknowledgements are reproduced in the OCR Copyright Acknowledgements Booklet. This is produced for each series of examinations and is freely available to download from our public website (www.ocr.org.uk) after the live examination series.

If OCR has unwittingly failed to correctly acknowledge or clear any third-party content in this assessment material, OCR will be happy to correct its mistake at the earliest possible opportunity.

For queries or further information please contact The OCR Copyright Team, The Triangle Building, Shaftesbury Road, Cambridge CB2 8EA.

OCR is part of Cambridge University Press & Assessment, which is itself a department of the University of Cambridge.

© OCR 2024